Jeep Junior Pedal Go-kart

24.21.34.00

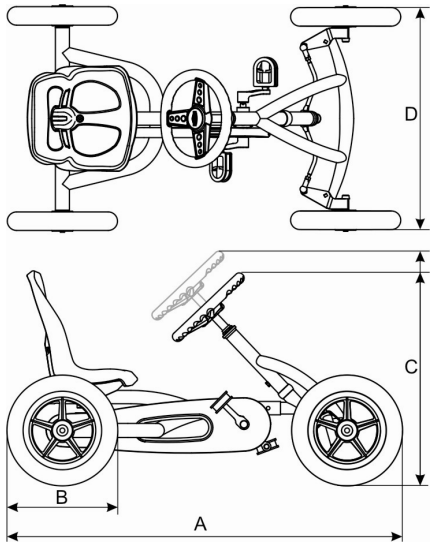

Kg	A (cm)	B (cm)	C (cm)	D (cm)
17	110	31,5	50-65	65

Box size	Weight	Ean code
71*82*26	17 kg	871583902354

Jeep Junior Pedal Go-kart

Jeep Junior Pedal Go-kart is a unique and newly-designed pedal go-kart in original Jeep design. Children already from the age of 3 years can now experience the feeling of real off-road driving! The Junior Pedal Go-kart is compact, very light and has 12” ball-bearing wheels with pneumatic tires.

The Junior Pedal Go-kart has the unique patented BFR-hub for intuitively use by kids: forward drive, reverse drive, freewheel and braking by using pedal action only! Because of the BFR the Jeep Junior combines optimum safety with maximum driving pleasure. And after you finished your race, the Jeep Junior Pedal Go-kart is very easy to store! With only 17kg of weight, 110 cm long and 65 cm broad you can easily lift the pedal Go-kart and put him straight-up in your garage.

1. Can be driven forwards and in reverse, thanks to the BFR.
2. Original Jeep design
3. Optimum safety, thanks to an automatically operating back-pedal brake (BFR).
4. Optimum safety, thanks to the freewheel (BFR).
5. Many years of driving pleasure, thanks to the adjustable steering wheel.
6. Many years of driving pleasure, thanks to the adjustable seat (3 positions).
7. Suitable for kids age 3 to 8!
8. Perfect road holding thanks to swing axle.
9. Fast and manoeuvrable thanks to 12” ball bearing wheels with pneumatic tires.
10. Compact, very light and therefore easy-to-store (straight-up position).
11. Tested under extreme conditions with positive results.