BERG Buddy John Deere

24.21.24

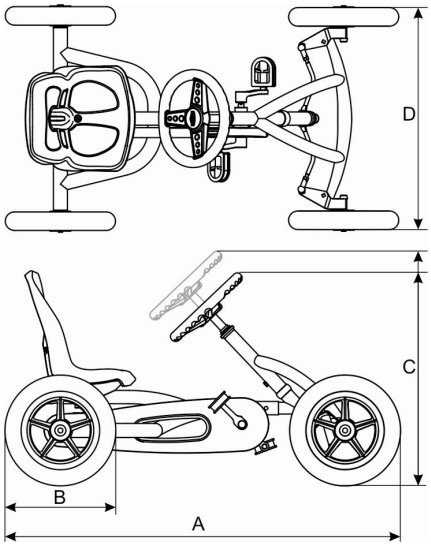

Kg	A (cm)	B (cm)	C (cm)	D (cm)
17	110	31,5	50-65	65

Box Size: 71x82x26 cm	Box weight:	Items/Euro-pallet:

EAN Code: 8715839023534

BERG Buddy John Deere

BERG Toys is proud to be official licensee of the biggest brand of tractor and agri-machines in the world, John Deere. Based on the BERG Buddy, BERG Toys introduces the BERG Buddy John Deere.

The BERG Buddy John Deere is a unique pedal Go-Kart in original John Deere design. Children already from the age of 3 years can now experience the feeling of driving a real John Deere! The Buddy John Deere is compact, very light and has 12” ball-bearing wheels with pneumatic off-road tyres as a result of which the pedal Go-kart turns out to be a real agri-cultural vehicle!

The Buddy John Deere has the unique patented BFR-hub for intuitively use by kids: forward drive, reverse drive, freewheel and braking by using pedal action only! Because of the BFR the BERG Buddy John Deere combines optimum safety with maximum driving pleasure. And after you finished your work, the BERG Buddy John Deere is very easy to store! With only 17kg of weight, 110 cm long and 65 cm broad you can easily lift the Buddy John Deere and put him straight-up in your barn.

1. Can be driven forwards and in reverse, thanks to the BFR.
2. Design inspired by the original John Deere vehicles, with original John Deere logo’s and colors.
3. Optimum safety, thanks to an automatically operating back-pedal brake (BFR).
4. Optimum safety, thanks to the freewheel (BFR).
5. Many years of driving pleasure, thanks to the adjustable steering wheel.
6. Many years of driving pleasure, thanks to the adjustable seat (3 positions).
7. Suitable for kids age 3 to 8!
8. Perfect road holding thanks to swing axle.
9. Fast and manoeuvrable thanks to 12” ball bearing wheels with pneumatic tyres.
10. Compact, very light and therefore easy-to-store (straight-up position).
11. Tested under extreme conditions with positive results.
12. CE and TÜV approved.